New GM Sheet Metal Technology Could Mean Gas Savings for Car Owners

General Motors has announced a breakthrough in sheet metal technology that could lead to double-digit gains in fuel economy.

The latest finding is one that uses extreme temperatures to turn ultra-lightweight magnesium into sheet metal suitable for automotive parts.

The magnesium sheet metal weighs 33 percent less than aluminum and 75 percent less than steel, and those weight savings could translate to dollars and cents saved at the gas pump.

For years, researchers have tried to make strong, non-corroding magnesium sheet metal, but failed – the sheet metal was lightweight, but didn't hold up well in corrosion or stress tests.

GM's R&D metals team, including Jon Carter, went back to the drawing board and developed a new process, one that used extreme heat to allow them to mold the magnesium into "precise, rigid shapes."

Carter's team then used the now-patented process to build a rear deck lid inner panel that withstood 77,000 robotic slams and 250-kilogram impact drops.

That proved the magnesium sheet metal was strong and durable.

Next, they tested their anti-corrosion treatment of the newly-formed magnesium by exposing it to 10 consecutive weeks of 24-hour environmental tests involving salt spray, 100 percent humidity, and extreme temperatures. The result?

"Like all of our advanced material vehicle parts, we subjected the magnesium trunk lid to the most severe strength and corrosion tests we know of, and it passed with flying colors," said Carter.

By using the new magnesium sheet metal to make the rear deck lid inner panel, rather than traditional steel, GM can trim away 2.2 pounds of weight. While that may not sound like much, those kilograms of weight savings will add up, said Greg Warden, GM executive director for Global Vehicle Body Engineering. "Every gram of weight reduction matters when it comes to improving fuel economy," said Warden.

Add the weight savings, plus the boost in fuel economy from GM's conventional engines and electric powertrains, and consumers can expect to see a significant savings at the pump, without sacrificing durability or safety, said Warden.

When can we expect to see this new magnesium sheet metal on vehicles at a local dealership?

The United States Automotive Materials Partnership estimates that by 2020, 350 pounds of magnesium will replace 500 pounds of steel and 130 pounds of aluminum per vehicle. That may sound like the distant future, but it's just eight years away.

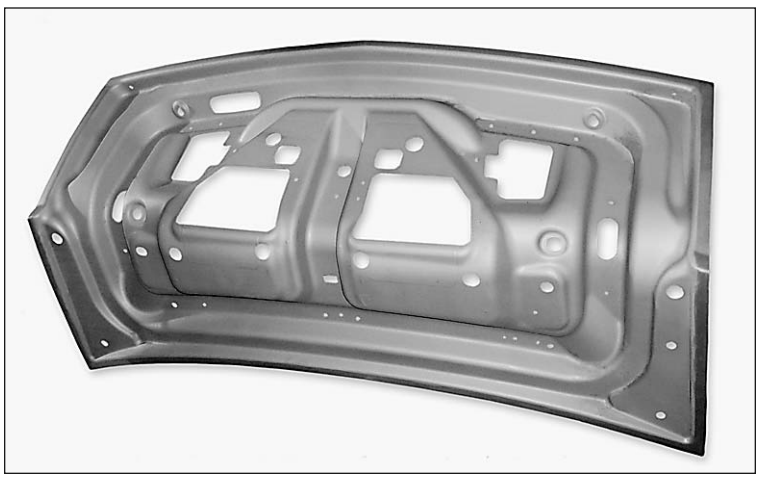

Magnesium deck lid

GM's European Logistics Move

DETROIT/PARIS/RUSSELSHEIM – As a first result of its global alliance, GM and PSA Peugeot Citroen have reached a long-term, exclusive agreement to transfer the majority of GM's logistics business in Europe to Gefco, a wholly-owned subsidiary of PSA Peugeot Citroen.

The agreement will impact the majority of the Opel/Vauxhall, Chevrolet and Cadillac logistics activities in Europe (including Russia) and includes services such as material and component deliveries to manufacturing plants, delivery of finished vehicles to dealerships and the transport of aftersales spare parts to distribution centers.

This agreement represents one of the largest logistics agreements in the European automotive industry. GM says it allows GM to gain cost savings and focus its internal resources more on GM's core automotive business.

GM Vice Chairman Steve Girsky, said, "This marks the first step in realizing benefits from the larger Alliance with PSA. This logistics agreement will bring operational efficiency and cost savings to GM and allow us to fully utilize the proven expertise of Gefco."

Philippe Varin, chairman of the Managing Board of PSA Peugeot Citroen, added: "This agreement is the first step in our long-term strategic alliance with GM. It enables Gefco to continue its strategy of broadening its existing client base and growing its global business operations."

The new logistics agreement between GM and Gefco will take effect in 2013.

On Feb. 29, GM and PSA Peugeot Citroen announced a broad-scale global strategic alliance that they say will leverage the combined strengths and capabilities of the two companies, contribute to the profitability of both partners and strongly improve their competitiveness.

Penske Increases 3rd Qtr. Dividend

The Penske Automotive Group's board of directors has approved a cash dividend of 13 cents per share for the third quarter of 2012.

The dividend is payable on Dec. 3 to shareholders of record on Nov. 12.

"Increasing the dividend to shareholders to 13 cents per share continues to demonstrate our commitment to returning capital to shareholders and the confidence we have in the auto retail environment," said Penske Automotive Group President Rob Kurnick.

The Penske Automotive Group operates 338 retail automotive franchises.

ED RINKE CHEVROLET BUICK GMC

CHEVROLET ED RINKE GM · OnStar by GM · CHEVY total confidence · MAKING STRIDES Against Breast Cancer · American Cancer Society · BUICK · Chevy Runs Deep

WE WILL BEAT ANY DEAL!

'12 CRUZE 24 mo Lease
$ 56* $1,299 DOWN
$110* $0 DOWN
EVERYONE'S PRICE

'13 MALIBU 24 mo Lease
$139* $1,299 DOWN
$194* $0 DOWN
EVERYONE'S PRICE

'12 TRAVERSE 24 mo Lease
$ 67* $999 DOWN
$107* $0 DOWN

'13 VOLT 36 mo Lease
$243* $1,299 DOWN
$279* $0 DOWN
EVERYONE'S PRICE

'13 CORVETTE 48 mo Lease
$399* $2,980 DOWN
$464* $0 DOWN

'13 SILVERADO 36 mo Lease
$168* $999 DOWN
$210* $0 DOWN
EVERYONE'S PRICE

GMC We Are Professional Grade · EXPERIENCE BUICK · SATELITE RADIO XM BEYOND AM BEYOND FM · BUICK GMC ED RINKE GM

Special 24 Month Leases
2 Years of Onstar Directions & Connections
2 Years of SiriusXM Radio • 2 Years of Maintenance

2012 ACADIA
GM EMPLOYEE PRICE $25,298*
LEASE $89* 24 month/10K Year

VERANO
PURCHASE PRICE $20,735*
LEASE $129* 24 month/10K Year

2012 REGAL
GM EMPLOYEE PRICE $21,950*
LEASE $159* 24 month/10K Year

SIERRA 1500 EXT CAB 4X4
Up to $12,250 in rebates
GM EMPLOYEE PRICE $21,938*
LEASE $169* 24 month/10K Year

Ray Stemple rstemple@edrinke.com · Nicole Dodge nhuminski@edrinke.com · Jim Pfeifle jpfeifle@edrinke.com

NO DOC FEES · Find Us on FACEBOOK

See us for your GM employee purchases.
1-877-451-7707
26125 Van Dyke at 10½ Mile Rd.
Visit our website: edrinke.com
SHOWROOM HOURS:
Mon. & Thurs. 8:30am-9:00pm; Tues., Wed., & Fri. 8:30am-6:00pm

* All prices & payments include GM rebates. Pictures may not represent actual vehicle. All leases are at 10,000 miles per year, All Payments are 24 month leases unless otherwise noted. Cruze-must qualify for 800 credit score, Lease Conquest. Malibu-must qualify for Lease Conquest. Traverse-must qualify for Lease Conquest, GMS employee discount, 800 credit score. Corvette-must quality for GMS employee discount, Corvette Loyalty, 48 month US Bank lease. Silverado-must qualify for GMS employee discount, USAA Insurance rebate, 36 month lease. Volt-due at signing is 1st payment, title, tax, plates, 36 month lease. Cruze, Traverse, Silverado and Corvette due at signing is 1st payment, title, tax, plate and acquisition fee. Corvette-due at signing 1st payment, title, tax, plate and acquisition fee. No security deposit required on Cruze, Traverse & Silverado. Volt, Malibu and Corvette require security deposit. Expiration Date –10/31/12.

See us for your GM employee purchases.
1-866-452-1300
24231 Van Dyke at 9½ Mile Rd.
Visit our website: edrinke.com
SHOWROOM HOURS:
Mon. & Thurs. 8:30am-9:00pm;Tues., Wed., & Fri. 8:30am-6:00pm

Dennis Thacker dthacker@edrinke.com · Paul Makowski pmakowski@edrinke.com

* All prices & payments include GM rebates. Pictures may not represent actual vehicle. Prices subject to change per GM incentives. Prices and payments are inclusive of GM Employee Discount (Unless otherwise stated). Leases are 24 months, 10,000 miles per year w/ approved S Tier credit w/ $999 due at signing, (unless otherwise noted). Prices & payments are plus tax, title, and plate fees. 0% financing in lieu of some factory rebates. Refundable security deposit required on certain vehicles – to be determined by lender. Must qualify for conquest with a 1999 or newer non GM lease. Verano lease is with $2855 down. Regal lease is with $1250 down. Acadia lease is with $1299 down. Sierra lease is with $2975 Down. Sierra and Verano purchase prices are 2012 model years. **See salesperson for details. Expiration Date –10/31/12.

ED RINKE • FAST • FRIENDLY • DISCOUNTS
VISIT OUR QUICK LANE
GM SERVICE CENTER
MICHIGAN'S LARGEST
•SERVICE DEPT. •PARTS •BODY SHOP
866-452-1547
26125 Van Dyke @ 10½ Mile
Center Line, MI 48015

Quick Oil Change EXPRESS LANE
LUBE OIL FILTER $23.95 Up to 5 qts.
Fluid Level, Brake & Alignment Check Included.
We use Genuine GM Oil & Filter
No additional or hidden charges.
Out the door pricing.
Open Mondays & Thursdays until 8:30pm
Excludes synthetic, Diesel & Med. Duty Trucks.
Most GM cars & trucks. One coupon per customer. Must present coupon with order. Plus tax. Expires 10-31-12.

BODY SHOP
586-754-7000 ext 1231
INSURANCE WRECK AMENDED
WE REPAIR ALL MAKES & MODELS
TRANSPORTATION AVAILABLE During Scheduled Repairs
FREE OIL CHANGE With Each Major Repair

SERVICE HOURS: Monday & Thursday 6:30am-9:00pm; Tuesday, Wednesday & Friday 6:30am-6:00pm • Shuttle at 6:30am - Pick-up Both Ways • All Day starting at 6:30am.